SEP 2013

NEWSLETTER N. 8BD/2013

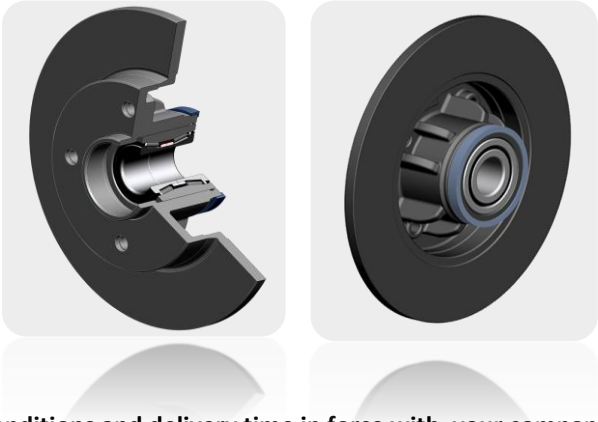

NEW BRAKE DISCS WITH BEARING

We are pleased to inform you that now you can order the following brake discs with bearing available at the usual conditions and delivery time in force with your company:

METELLI REF.	CIFAM REF.	MAKE	APPLICATION	O.E.	F/R	YEAR	METELLI BARCODES	CIFAM BARCODES
23-0722	**800-722**	RENAULT / RENAULT LCV, TRUCK	Clio III (BR/CR0/1) : 1.2 16v;1.2 16v TCE;1.4 16v;1.5 DCi;1.6 16v;2.0 16v;2.0 16v Sport / Clio III, Grandtour (KR0/1) : 1.5 DCi / Clio Van III : 1.2 16v;1.5 DCi / Grand Modus : 1.2 16v;1.2 16v TCE;1.5 DCi;1.6 16v / Megane II (BM0, CM0), SW, Coupe : 1.4 16	7701207823	R	02-08/04-	8032747206249	8032747246245
23-0804	**800-804**	RENAULT	Scenic II (JM) : 1.4 16v;1.5 DCi;1.6 16v;1.9 DCi;2.0;2.0 16v T.;2.0 DCi	7701207898	R	03-10	8032747207062	8032747247068
23-0827	**800-827**	CITROËN / PEUGEOT	307 II, SW : 1.4 16v;1.6 16v, Cabrio;1.6 HDi 16v;1.6 HDi 16v FAP;2.0 16v;2.0 16v, Cabrio;2.0 HDi 16v, Cabrio / C4 I, Coupe (LC, LA) : 1.4 16v;1.6 16v;1.6 16v HDi;1.6 HDi;2.0 16v;2.0 HDi 16v	4246Z9	R	00-	8032747207291	8032747247297
23-0878	**800-878**	CITROËN / PEUGEOT	207, SW (WA, WC, WD, WK) : 1.4 8v;1.6 16v;1.6 16v, Coupe;1.6 16v, Coupe, Cabrio;1.6 HDi 16v;1.6 HDi 16v FAP, Coupe, Cabrio;1.6 HDi 8v;1.6 HDi Coupe, Cabrio / 208 : 1.2 VTi 12v;1.4 8v HDi;1.4 VTi;1.6 e-HDi;1.6 THP;1.6 VTi / 307 II, SW : 1.4 16v;1.6 16v, Ca	424919 / 424932	R	05-	8032747046227	8032747046197
23-1394	**800-1394**	CITROËN / PEUGEOT	308 Coupe, Cabrio : 1.6 16v;1.6 16v Cabrio;1.6 8v HDi;1.6 HDi;2.0 HDi / 308 I, SW : 1.4 16v;1.4 16v Vti;1.6 16v;1.6 16v THP;1.6 Bioflex;1.6 HDi;1.6 HDi 16v;1.6 HDi 16v FAP;1.6 HDi 8v;2.0 HDi;2.0 HDi 16v / C4 II (B71) : 1.4 VTi;1.6 HDi;1.6 Vti;1.6 VTi LPG;	424966/ 424965	R	07-	8032747100905	8032747100899

You can find relevant applications and further information in our catalogue

We are at your disposal for any further information you may require

Best Regards
Marketing Department